(12) INTERNATIONAL APPLICATION PUBLISHED UNDER THE PATENT COOPERATION TREATY (PCT)

(19) World Intellectual Property Organization
International Bureau

(43) International Publication Date
10 March 2016 (10.03.2016)

WIPO | PCT

(10) International Publication Number
WO 2016/036254 Al

(51) International Patent Classification:
B63B 59/10 (2006.01) *B63G 8/00* (2006.01)

(21) International Application Number:
PCT/NO20 15/050 149

(22) International Filing Date:
1 September 2015 (01 .09.2015)

(25) Filing Language: Norwegian

(26) Publication Language: English

(30) Priority Data:
201401063 3 September 2014 (03.09.2014) NO

(71) Applicant: **KYSTVACEN SLIP & MEK AS** [NO/NO]; Flat0yveien 24, N-6523 Frei (NO).

(72) Inventors: **N0STVOLD, Einar;** Kantarellen 2, N-65 18 Kristiansund N (NO). **N0STVOLD, Helge;** Juulenga 24, N-65 16 Kristiansund N (NO).

(74) Agent: **HAMSØ PATENTBYRA ANS;** P.O.BOX 171, 4302 Sandnes (NO).

(81) Designated States *(unless otherwise indicated, for every kind of national protection available):* AE, AG, AL, AM, AO, AT, AU, AZ, BA, BB, BG, BH, BN, BR, BW, BY, BZ, CA, CH, CL, CN, CO, CR, CU, CZ, DE, DK, DM, DO, DZ, EC, EE, EG, ES, FI, GB, GD, GE, GH, GM, GT, HN, HR, HU, ID, IL, IN, IR, IS, JP, KE, KG, KN, KP, KR, KZ, LA, LC, LK, LR, LS, LU, LY, MA, MD, ME, MG, MK, MN, MW, MX, MY, MZ, NA, NG, NI, NO, NZ, OM, PA, PE, PG, PH, PL, PT, QA, RO, RS, RU, RW, SA, SC, SD, SE, SG, SK, SL, SM, ST, SV, SY, TH, TJ, TM, TN, TR, TT, TZ, UA, UG, US, UZ, VC, VN, ZA, ZM, ZW.

(84) Designated States *(unless otherwise indicated, for every kind of regional protection available):* ARIPO (BW, GH, GM, KE, LR, LS, MW, MZ, NA, RW, SD, SL, ST, SZ, TZ, UG, ZM, ZW), Eurasian (AM, AZ, BY, KG, KZ, RU, TJ, TM), European (AL, AT, BE, BG, CH, CY, CZ, DE, DK, EE, ES, FI, FR, GB, GR, HR, HU, IE, IS, IT, LT, LU, LV, MC, MK, MT, NL, NO, PL, PT, RO, RS, SE, SI, SK, SM, TR), OAPI (BF, BJ, CF, CG, CI, CM, GA, GN, GQ, GW, KM, ML, MR, NE, SN, TD, TG).

Published:

— *with international search report (Art. 21(3))*

— *with amended claims (Art. 19(1))*

(54) Title: CRAWLER CONFIGURED FOR SUBMARINE USE

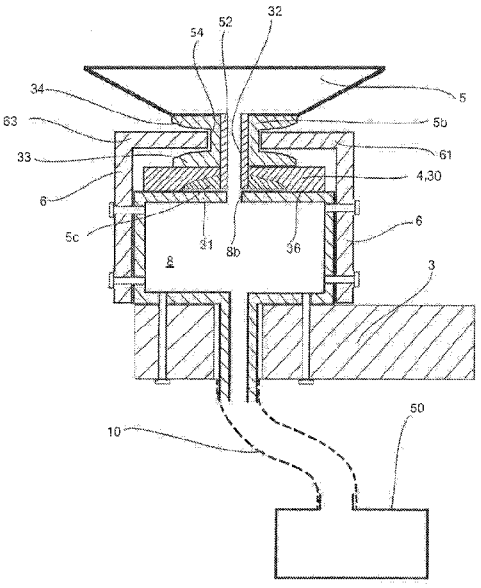

A - A

Fig. 4

(57) Abstract: A crawler (100) configured for submarine use, with a bottom side for positioning against a surface (28), including : - at least two wheels (2) and a driving device (19) for driving at least one of the two wheels (2); - a track (4) extending around and between the wheels (2), the track (4) between the wheels (2) extending in an inner portion (29) and an outer portion (30), wherein an outside of the outer portion (30) of the track (4) forms the bottom side of the crawler (100); - a rail (31, 31', 31") positioned within an inside of the outer portion (30) of the track (4); - suction cups (5, 5', 5") on the outside of the track (4) for positioning against the surface (28); and - a suction device (50) in fluid communication with the suction cups (5, 5', 5"), so that a negative pressure is produced in the suction cups (5, 5', 5") when the suction cups (5, 5', 5") on the outside of the outer portion (30) of the track (4) are placed against the surface (28), and the crawler (100) is thereby held fixed against the surface (28), wherein - each suction cup (5) is provided with a neck (5b, 5b', 5b"); - the neck (5b, 5b', 5b") is attached to the track (4); - the neck (5b, 5b', 5b") includes at least one gap 54; - an internal channel (32, 32', 32") extends through the neck (5b, 5b', 5b") and the track (4); - a guide (6, 6') fixed in the crawler (100) includes at least one guide rib (61, 63; 65) positioned in the gap (54) when the suction cups (5, 5', 5") are on the outside of the outer portion (30) of the track (4); and - a fluid connection is formed from a vacuum pipe (10, 10', 10"), a vacuum chamber (8, 8', 8"; 38) and the internal channel (32, 32', 32") between the suction device (50) and the suction cup (5, 5', 5").

WO 2016/036254 A1

CRAWLER CONFIGURED FOR SUBMARINE USE

The invention relates to a crawler configured for submarine use, with a bottom side for positioning against and adhesion by suction to a surface. The crawler can be used for transport or work, for example cleaning the hull of a ship, installing and removing plugs in hull passages and operating valves on underwater structures.

The greatest challenge with crawlers cleaning surfaces and performing other tasks under water is to hold the crawler stationary when it is subjected to forces from a control cable, possibly from a hose for collecting marine fouling, sea currents or waves.

Prior art for underwater transport and work comprises several types of devices. For work offshore, so-called Remotely Operated Vehicles or ROVs are often used. An ROV moves in the water by means of one or more propellers and can, to a certain degree, remain stationary relative to the place where it is carrying out work. If there is a fixed object to grasp, the ROV can hold on to this with a manipulator arm provided with a grip-hook. If there is a smooth surface that is stationary, the ROV may hold on to this with an arm provided with a suction cup. If the ROV holds on to a hull and is subjected to back-sweep or rolling motion of the hull, it will easily pivot around the point that it is holding on to, and therefore will often not have a sufficiently stable working position. A task which is carried out by ROVs today is installing and removing plugs from hull passages in connection with the maintenance of valves on the inside of the hull passage. Such work is often dependent on calm weather in order to be carried out. With the present-day techniques, the weather may thus delay the work.

Surfaces that are submerged in water, especially in seawater, will become covered in fouling over time. The fouling may consist of organisms with a hard surface, like shells and barnacles, and of organisms with a soft surface, like tunicates and algae. A surface which is basically even will become uneven after some time as it becomes covered in fouling. In particular, fouling from shells will give an uneven surface.

For cleaning hulls of marine fouling, there are several variants of cleaning tools and methods of holding the device carrying the cleaning tool stationary relative to the surface that is being cleaned. The device may be held stationary with propellers, or the device may be provided with a vacuum chamber sealing against the surface that the device is cleaning and a propeller or a pumping device creating negative pressure in the vacuum chamber, so that the device is pressed against the surface. Other solutions include holding the device against the surface by means of magnets. Some devices have an arrangement with two sets of suction cups which alternatingly adhere to and move along the surface, so that the device moves discontinuously along the surface, which is undesired in many cases.

A suction cup can be made from a relatively soft, elastic material. The rim of the suction cup against the surface towards which it is sucked may thereby mould itself somewhat according to the character of the surface. The wall of the suction cup may be stretched or compressed so that the height of the suction cup may vary. The wall of the suction cup may further be given a corrugated form, so that the height of the suction cup may be further varied.

US4574722 discloses a device which is driven by wheels and moves along a surface which is to be cleaned. A negative pressure in a vacuum chamber holds the device to the surface. One drawback is that the vacuum chamber gives less holding power than the use of a suction cup against the surface. The friction of the wheels against the surface determines the stability of the device. Another drawback is that a diver is needed to control the device. A larger crew will therefore be required in order to perform the task than if a remote-controlled device carries out the same job.

US3906572 discloses a device resembling the device disclosed in US4574722, but the device is remote-controlled via a control cable. The device may also form a platform for operations under water. A drawback of this structure is that if the device is to carry out work that subjects the device to great forces, the pressure in the vacuum chamber must be so low that the friction between a seal in the vacuum chamber, sealing against the surface, and the surface will be so great that the wheels that are to provide propulsion may spin during a movement.

US4270484 discloses a device for carrying out painting. The device uses electromagnets to hold on to the surface to be painted, in addition to a propeller as an extra means. This device uses a wheel for propulsion on the surface. A drawback of electromagnets is that the magnets only create a holding force against the surface and that it is the friction of the wheel against the surface that determines the stability of

the device. Another drawback is that the device can only be used on magnetic surfaces.

WO8502135A1 discloses a crawler including two chains with suction cups to be placed against a vertical or sloping surface. Negative pressure for the suction cups is controlled by separate valves for each suction cup. The crawler is relatively complicated. A vacuum pump produces negative pressure in the suction cups via a separate vacuum conduit which is located in an operator panel. The crawler is unsuitable for use in water. Further, the vacuum conduit may kink at corner passages, for example, so that the negative pressure disappears and the crawler loses its suction power against the surface to which it is attached. A further drawback is that the device includes a cable in addition to the vacuum conduit for controlling the device. This complicates automatic manipulation of the crawler by the vacuum conduit being reeled on or off a drum.

US4664212 discloses a crawler including two tracks with recesses on their outer sides for positioning against a surface. Support beams with vacuum chambers lie under the tracks and on the opposite side of the recesses. Holes through the tracks form connections between the vacuum chambers and the recesses. A negative pressure is thereby created in the recesses when there is negative pressure in the vacuum chambers. The tracks with the recesses adhere by suction to the surface. The design of the tracks is an alternative to the use of suction cups. The tracks are specially formed to be able to move across a rough surface such as a rough concrete surface. Ordinary suction cups easily become worn on such a surface and the crawler may fall down because of lack of holding power. A drawback of this crawler is that it does not have any guides that hold the tracks against the support beams. By a load on the crawler in a direction away from the surface, there may thereby be a leakage of ambient air into the connections between the recesses of the tracks and the vacuum chambers, so that the negative pressure is reduced or disappears, and the adhesion to the surface ceases. The crawler has air ejectors to create negative pressure and is equipped with air motors for propulsion. The device will therefore not work in water. Another drawback is costly and specially made tracks, and that the edges of the many vacuum chambers will cause much wear on the track. A further drawback is that the tracks will have to be run in mutually opposite directions or the track must be run only on one side of the crawler for the crawler to change direction. The suction cups will then slide across the surface, with resulting wear and a risk of losing their hold on the surface to which the crawler is attached by suction.

EP0710188B1 discloses a crawler including two chains with suction cups for positioning against a surface. Rails with grooves provided with channels lie under the chains on the opposite side of the suction cups. Pipes through the chains form connections between the suction cups and the channels which in turn are connected to a source of negative pressure. Negative pressure may thereby propagate from the source of negative pressure, via the channels and pipes to the suction cups, so that they adhere to the surface. The channels are provided with lips which are resting against tracks on the chains and provide sealing between the channels and the tracks. Each link of the chains is provided with a projection that is guided by a groove in the rail. The crawler is relatively complicated.

The invention has for its object to remedy or reduce at least one of the drawbacks of the prior art or at least provide a useful alternative to the prior art.

An object of the invention is to produce a crawler which is of a relatively simple structure, in which the connection between the suction cups and the source of negative pressure is simple and robust, while, at the same time, it is tight towards the surroundings, in which the track solution is simple and the tracks are carried stably, and in which there are few valves and control devices, so that the crawler will be relatively inexpensive to produce and have high reliability. The object is also to produce a crawler which, compared with known crawlers, lends itself well to carrying out operations under water. An object is to produce a crawler which is suitable for installing and removing plugs in hull passages under water. A further object is to produce a crawler which, compared with known crawlers, is better able to perform cleaning of surfaces under water in a remote-controlled operation.

The object is achieved through the features which are specified in the description below and in the claims that follow.

The invention is defined by the independent claim. The dependent claims define advantageous embodiments of the invention.

In a first aspect, the invention relates to a crawler configured for submarine use, with a bottom side to be placed against a surface, including:

- at least two wheels and a driving device for driving at least one of the two wheels;
- a track extending around and between the wheels, the track between the wheels extending in an inner portion and an outer portion, wherein an outside of the outer portion of the track forms the bottom side of the crawler;
- a rail positioned within an inside of the outer portion of the track;

- suction cups on the outside of the track for positioning against the surface; and
- a suction device in fluid communication with the suction cups so that a negative pressure is produced in the suction cups when the suction cups on the outside of the outer portion of the track are placed against the surface, and the crawler is thereby held to the surface,

wherein:

- each suction cup is provided with a neck;
- the neck is attached to the track;
- the neck includes at least one gap;
- an internal channel extends through the neck and the track;
- a guide fixed to the crawler includes at least one guide rib positioned in the gap when the suction cups are on the outside of the outer portion of the track; and
- a fluid connection is formed from a vacuum pipe, a vacuum chamber and the internal channel between the suction device and the suction cup.

The guide may consist of two longitudinal guide ribs on opposite sides of the neck of the suction cup. The guide may be fixed to the rail.

The neck of the suction cup may be provided with a circular groove; and a guide rib may be provided with a longitudinal bulb in its longitudinal direction, so that the bulb may be positioned in the groove when the suction cup is on the outside of the outer portion of the track. The suction cup may be attached to the track with a pipe to an attachment block on the inside of the track. The suction cup may be attached to the track with a through connection to an attachment block on the inside of the track.

The track may, in the main, lie tight and slidingly against the rail in a sealing area. The rail may have at least one vacuum chamber in fluid communication with the suction device via the vacuum pipe, and the vacuum chamber may be in fluid communication with the internal channel through a longitudinal opening. The rail may have two vacuum chambers, each in fluid communication with a respective suction device through a respective vacuum pipe, and the two vacuum chambers may be in fluid communication with different internal channels.

The rail may have a recessed longitudinal middle portion which is open towards the track, and the recessed middle portion may be in fluid communication with the suction device via the vacuum pipe, so that a vacuum chamber is formed between the rail and the track, and the vacuum chamber is in fluid communication with the internal channel.

The vacuum chamber may be elongated.

A method of changing the direction of propulsion of a crawler as described above is disclosed as well. By an attachment plane is meant a plane consisting of the suction cups on the bottom side of the crawler. When the suction cups are attached to the surface, the attachment plane coincides with the surface. Actuators may move the suction cups from a position above the attachment plane, towards and past the attachment plane and back. The suction cups may be collectively or individually movable. The number of holders, actuators and suction cups may be different from the four shown.

Taking for a starting point that the crawler is stuck fast to a surface, such as the surface mentioned above, by means of the suction cups, the changing of the direction of propulsion of the crawler comprises the following steps:

- moving at least two of the suction cups of a turntable up to the attachment plane, into position against the surface;
- producing negative pressure between the suction cups of the turntable and the surface, so that the suction cups of the turntable adhere to the surface;
- removing negative pressure between the suction cups of the track and the surface, so that the suction cups of the track detach from the surface;
- further moving the suction cups of the turntable past the attachment plane so that the suction cups of the track and the frame structure of the crawler are lifted from the surface;
- rotating the turntable relative to the frame structure, so that the frame structure is rotated relative to the surface;
- retracting the suction cups of the turntable to the attachment plane, so that the suction cups of the track are positioned against the surface;
- producing negative pressure between the suction cups of the track and the surface, so that the suction cups of the track adhere to the surface;
- removing negative pressure between the suction cups of the turntable and the surface, so that the suction cups of the turntable detach from the surface; and
- further retracting the suction cups of the turntable from the attachment plane, so that the suction cups of the turntable are moved away from the surface.

The frame structure forming a main part of the crawler has thereby been rotated and been given a new longitudinal direction, which is also the new direction of propulsion of the crawler. If necessary, the above steps are repeated until the crawler has been given the desired direction of propulsion.

A plug tool for installing and/or removing a plug in a hull passage by means of a crawler as described above and a method of using the plug tool to install and/or remove a plug in a hull passage are described as well. The plug tool may include two or more linear actuators mounted on a turntable. The linear actuators may have piston rods which are attached to a plug holder which includes a locking device for the plug. The locking device may be a hydraulic actuator. The plug tool may also include a linear actuator with a piston rod with a hydraulic male coupling for engagement with a corresponding hydraulic female coupling in the plug for the application of hydraulic pressure. The linear actuators may be electric, or they may be hydraulic cylinders.

The plug is locked to the plug holder, and the hydraulic male coupling is inserted into the hydraulic female coupling before the crawler is launched. The crawler is then positioned at and attached to the surface with the suction cups as described above, with the plug over the hull passage. Then the linear actuators are extended as well, so that the plug is moved towards the surface and into the hull passage. Next, hydraulic pressure is applied to the plug through the hydraulic couplings, which, in a known manner, brings a seal in the plug to expand against a sealing surface in the hull passage so that the plug is locked. After that, the actuator is retracted, so that the male coupling is pulled out of the female coupling. The locking device is disengaged, so that the plug is released from the plug holder. Then the linear actuators are retracted, so that the plug holder is removed from the plug. The plug is now installed in the hull passage and the crawler may be detached from the surface and removed. The above may be repeated in the reverse order when the plug is to be removed from the hull passage. Instead of having the linear actuator with the hydraulic male coupling, the plug tool may alternatively be equipped with a motor or an actuator for the operation of a mechanically operable plug.

In what follows, examples of preferred embodiments are described, which are visualized in the accompanying drawings, in which:

Figure 1 shows a front view of a crawler according to the invention;

Figure 2 shows a side view of the crawler according to the invention;

Figure 3 shows a bottom view of the crawler according to the invention;

Figure 4 shows a cross section on a larger scale taken along the section line A-A of figure 2 of one embodiment of the invention;

Figures 5 and 6 show cross sections taken along the section line A-A of figure 2 of another embodiment of the invention;

Figure 7 shows a cross section taken along the section line A-A of figure 2 of yet another embodiment of the invention;

Figure 8 shows the same as figure 4 with an alternative embodiment of a suction cup;

Figure 9 shows the same as figure 4 with an alternative design of a guide and the neck of a suction cup;

Figure 10 shows a bottom view on a smaller scale, in which the crawler has a buoyancy body mounted on it; and

Figure 11 shows a front view, in which the crawler has a tool mounted on it for the installation and removal of a plug in a hull passage.

Figures 1-3 show from the front, from the side and from below, respectively, a crawler according to the invention for use in work under water.

Directional indications, such as "bottom side", "longitudinal direction", "lateral direction", "vertical direction" and so on, refer to the crawler when it is on a horizontal surface. Referring to figures 1-3, showing the x-, y- and z-direction, the "longitudinal direction" is the x-direction, in the horizontal plane, coinciding with the direction of propulsion of the crawler. The "lateral direction" is the y-direction, in the horizontal plane, transverse to the direction of propulsion of the crawler, and the "vertical direction" is the z-direction. Such directional indications are used for practical reasons to describe the crawler and are not to be understood as restrictive, as an important characteristic of the crawler is that, under water, it can be used in any orientation.

In the drawings, the reference numeral 100 indicates a crawler. The crawler 100 includes a frame structure 1 with at least two wheels 2 mounted thereon, one wheel 2 at the front and one wheel 2 at the back. In the drawings, the crawler 100 is shown with four wheels 2, with two wheels 2 on either side of the crawler 100. The crawler 100 is provided with a driving device 19 for driving at least one of the wheels 2 (see figure 3). The wheels 2 may be connected in pairs to a through shaft 9, or each wheel 2 may be provided with a separate shaft 9. A track 4 extends around and between the wheels 2 on either side of the crawler 100. Between the wheels 2, the track 4 extends in an inner portion 29 and an outer portion 30, wherein an outside of the outer portion

30 of the track 4 forms a bottom side of the crawler 100. A rail 31 (see figures 4, 8, 9) is placed within an inside of the outer portion 30 of the track 4 and is fixed relative to the frame structure 1. On its outside, the track 4 is provided with suction cups 5 with suction faces facing away from the track 4.

The crawler 100 also includes a suction device 50 which is in fluid communication with the suction cups 5. The suction device 50 may be any device that produces a negative pressure relative to the ambient pressure of the water surrounding the crawler 100. The suction device 50 may be, for example, a pump (not shown) which is mounted in the crawler 100 or a hose connection to a pump standing on a boat deck (not shown).

The crawler 100 further includes propellers 17 for moving the crawler 100 in a longitudinal direction and in a lateral direction, and propellers 18 for moving the crawler 100 in a vertical direction.

The driving device 19 for the at least one of the wheels 2 and driving devices (not shown) for the propellers 17, 18 may be electric, pneumatic or hydraulic motors. Electric motors may be supplied with energy from batteries (not shown) or via a cable 23 from a boat (not shown), for example. Pneumatic or hydraulic motors may be supplied with pressurized air or hydraulic fluid through an umbilical (not shown). As an alternative, the crawler 100 may be provided with an electrically operated hydraulic pump (not shown) which is supplied with electric power from batteries or via the cable 23. In addition to these energy consumers, the crawler 100 also contains actuators (not shown) which may be electric, pneumatic or hydraulic, sensors, valves and control devices, and possibly cameras, lights and tools, which may be supplied with energy from batteries, through the cable 23 or from an electrically operated hydraulic pump. The crawler 100 may be remote-controlled through the cable 23, or it may be operated by a diver (not shown). A yoke 22 keeps the cable 23 at a distance from movable parts that may damage the cable 23.

The crawler 100 as shown in figures 1-3 has negative buoyancy in water. It may therefore be positioned under water by a hoisting device (not shown).

Figure 10 is a bottom view of the crawler 100 with a buoyancy body 24 mounted on it, so that it will have approximately neutral buoyancy in water. When the crawler 100 has approximately neutral buoyancy, it can be positioned with the propellers 17, 18.

When in use, the crawler 100 is positioned with the suction faces of the suction cups 5 on the outside of the outer portion 30 of the track 4 facing a surface 28, see figure 2. The surface 28 may be a ship's side. The suction device 50 produces negative pres-

sure between the suction cups 5 and the surface 28, so that the suction cups 5, and thereby the track 4 and crawler 100, are stuck fast to the surface 28.

Figure 3 shows the crawler 100 from below, with a brush tool 20 mounted on it that is equipped with a lifting/lowering device 21.

Figure 4 shows a cross section, taken along the section line A-A of figure 2, of one embodiment of the invention. Each suction cup 5 is provided with a neck 5b, and the neck 5b is attached to the track 4. The neck 5b has an internal channel 32 which forms part of a fluid connection between the suction device 50 and the suction cup 5. A guide 6 which is fixed relative to the frame structure 1 of the crawler 100 guides the necks 5b of the suction cups 5 in the longitudinal direction of the track 4. The guide 6 in figures 4-8 consists of a longitudinal inner guide rib 61, on that side of the neck 5b of the suction cup 5 which faces the middle portion of the crawler 100, and a longitudinal outer guide rib 63, on the opposite side of the neck 5b of the suction cup 5. The guide 6 fixes the neck 5b and consequently the track 4 in the transverse direction of the track 4.

The guide ribs 61, 63 are attached to the rail 31. The rail 31 is attached to a bracket 3 which is attached to the frame structure 1, see figure 1. The guide ribs 61, 63 could alternatively have been attached to the bracket 3 or further alternatively directly or indirectly to the frame structure 1 in some other way. Figure 1 and figures 4-8 show the attachment of the rail 31, the guide ribs 61, 63 and the bracket 3 with bolts. Alternatively, some or all of these attachments could be welded joints.

The neck 5b of the suction cup 5 has an internal guide lip 33 and an external guide lip 34 positioned on the inside and outside, respectively, of the inner and outer guide ribs 61, 63. The guide lips 33, 34 form a gap 54 between them. The guide ribs 61, 63 are positioned in the gap 54 so that the track 4 is prevented from lifting from the rail 31.

In figure 4, the internal channel 32 of the neck 56 is formed of a pipe 52 which forms a through connection from the suction cup 5, through the neck 5b, through the track 4 and through an attachment block 5c. The attachment block 5c is recessed in the track 4 from the inside of the track 4, wherein the bottom side of the attachment block 5c in the main flushes with the inside of the track 4. The suction cup 5 and the track 4 are formed from elastic materials, typically an elastomer. The neck 5b and the attachment block 5 may be made from a more rigid material, the more rigid material possibly being a polymer which may also be an elastomer. The pipe 52 forming the channel 32 may be made of metal, for example 316 stainless steel. Depending on the choice of

materials for the different components, they may be moulded together, glued together, vulcanized together, attached to each other by heat treatment or attached to each other with a threaded connection. The pipe 52 may also be provided with an attachment collar at one or both ends (not shown).

The rail 31 in figures 4, 8, 9 is shown as a channel section, but other forms may be used as well, for example a pipe. An opening 8b in the form of a longitudinal gap in the rail 31 forms a connection between an internal cavity 8 of the rail 31 and the channel 32 of the neck 5b. The inner diameter of the channel 32 may correspond to the width of the opening 8b. The inner diameter of the channel 32 may be somewhat smaller than the width of the opening 8b. The inner diameter of the channel 32 may be somewhat larger than the width of the opening 8b. It is advantageous that the width of the opening 8b is narrow and the inner diameter of the channel 32 is small, as this reduces the resistance that the track 4 will have to overcome to be moved along the rail 31. The width of the opening 8b and the inner diameter of the channel 32 may not be too small as this will reduce the fluid flow in the suction cup 5 and thereby the negative pressure created to give holding power against the surface 28.

A vacuum pipe 10 forms a connection between the cavity 8 of the rail 31 and the suction device 50. Control devices not shown, such as switches, regulators and valves, may be switched on and off and possibly control the negative pressure in the vacuum pipe 10. When the pressure in the vacuum pipe 10 is lower than the ambient pressure, a negative pressure is created in the cavity 8 of the rail 31, which may then be termed a vacuum chamber. Water and possibly air will be sucked in from the area between the suction cup 5 and the surface 28, see figure 2, through the channel 32 of the neck 5b, into the vacuum chamber 8 and further through the vacuum pipe 10 of the suction device 50. Thereby negative pressure will arise between the suction cups 5 and the surface 28, so that the suction cups 5 adhere to the surface 28. The track 4 lies, in the main, tight and slides with its inside against the rail 31 in a sealing area 36. The sealing area 36 ensures that surrounding water, possibly air, is not or only in a limited amount sucked into the vacuum chamber 8 between the track 4 and the rail 31.

Figures 5 and 6 show cross sections taken along the section line A-A of figure 2 of an alternative embodiment in which a rail 31' includes two vacuum chambers 8' and 8" which are connected to their respective suction devices 50 through respective vacuum pipes 10', 10". A bolt 35 connects the suction cups 5', 5" to respective necks 5b', 5b", the track 4 and respective attachment blocks 5c', 5c", in a corresponding way to that explained for the pipe 52 forming the channel 32 in figure 4. Figure 5 shows a through

channel 32' laterally offset in relation to the channel 32 of figure 4, forming a connection from the suction cup 5' to the bottom side of the attachment block 5c', into alignment with a longitudinal gap 8b' of the rail 31'. Figure 6 shows a correspondingly laterally offset channel 32" which forms a connection from the suction cup 5" to the bottom side of the attachment block 5c", into alignment with a longitudinal gap 8b" of the rail 31'. The suction cups 5', 5" are positioned along the track 4, for example alternately, so that the suction effect of the two vacuum chambers 8', 8" is distributed between the suction cups 5', 5". Two vacuum circuits thereby appear. The rail 31' is provided with a longitudinal seal 361 between the longitudinal gap 8b and the longitudinal gap 8b". The attachment blocks 5', 5" rest sealingly against the longitudinal seal 361. The longitudinal seal 361 may be formed from a resilient material, such as a rubber or a synthetic elastomer like polyurethane. If the negative pressure is reduced or disappears in one vacuum circuit, which may be owing to a fault in the circuit, a leak between the track 4 and the rail 31' in the sealing area 36, or a suction cup 5', 5" detaching from the surface 28 to which it is attached, the suction cups 5', 5" in this circuit will have their suction effect reduced or lose it. However, the suction effect of the suction cups 5', 5" in the other vacuum circuit will not be affected.

The vacuum chambers 8, 8', 8" in figures 4-6, 8, 9 form an integral part of the rail 31, 31'. The rail 31, 31' extends between the wheels 2, which hold the track 4, and is terminated at a short distance from the wheels 2. However, the vacuum chambers 8, 8', 8" may be divided into several separate vacuum chambers placed one after another as part of or connected to the rail 31, 31' (not shown).

Referring to figures 4-6, 8, 9, the gaps 8b, 8b', 8b" are described as longitudinal gaps 8b, 8b', 8b". These gaps may extend over the entire length of the vacuum chambers 8, 8', 8". The gaps 8, 8', 8" may alternatively consist of several short, oblong openings, or many small openings that together give a sufficient connection between the vacuum chambers 8, 8', 8" and the channels 32, 32', 32" in the necks 5b, 5b', 5b" of the suction cups 5, 5', 5". It is only on that part of the outer portion 30 of the track 4 which rests against the rail 31, 31' between the wheels 2 that the channels 32, 32', 32" of the necks 5b, 5b', 5b" are in communication with the openings 8b, 8b', 8b" of the vacuum chambers 8, 8', 8", so that the suction cups 5, 5', 5" will have negative pressure and adhere to the surface 28. When a portion of the track 4 is either around one of the wheels 2 or in a position in which the track 4 is about to make contact with or leave the surface 28, or in the inner portion 29 of the track 4, there is no negative pressure in the suction cups 5, 5', 5".

Figure 7 shows a cross section taken along the section line A-A of figure 2 of an alternative rail 31" with a recessed longitudinal middle portion 37 which is open towards the track 4. The recessed middle portion 37 is in fluid communication with the suction device 50 via a vacuum pipe 10, so that a vacuum chamber 38 is formed between the recessed middle portion 37 of the rail 31" and the track 4. The channel 32 in the neck 5b of the suction cup 5 propagates the negative pressure from the vacuum chamber 38 to the suction cup 5. At the same time, the negative pressure of the vacuum chamber 38 sucks the track 4 in so that the track 4 is pressed against the rail 31" in the sealing areas 36 at the sides of the recessed middle portion 37. This improves the seal between the track 4 and the rail 31" and helps to ensure the suction effect of the suction cups 5 in that water or air is not drawn in between the track 4 and the rail 31". Such an embodiment increases the resistance between the track 4 and the sealing area 36 when the track 4 is moved relative to the rail 31.

Figure 8 shows a cross section taken along the section line A-A of figure 2 of an alternative embodiment of the suction cup 5. The wall 53 of the suction cup 5 is formed as a corrugated wall 53 or a bellows-shaped wall 53. This increases the ability of the suction cup 5 to stretch or be compressed so that the suction cup 5 will adhere to a more uneven surface. It also increases the possibility of the mouth portion 59 of the suction cup 5 to be slanted relative to the track 4. This is advantageous on uneven surfaces and where the surface has curvatures of relatively small radii. All the suction cups 5, 5', 5" mentioned may have a wall 53 formed as a corrugated wall 53 or a bellows-shaped wall 53.

Figure 9 shows a cross section taken along the section line A-A of figure 2 of an alternative embodiment of a guide 6'. In its edge portion facing the neck 56 of the suction cup 5, a guide rib 65 is provided with a longitudinal bulb 67 in the length of the guide rib 65. At the bottom 55 of the gap 54 between the guide lips 33, 34, the neck 56 is provided with a circular groove 57 with a diameter somewhat larger than the diameter of the bulb 67, as is shown in figure 9. The distance between the guide lips 33, 34 is smaller than the diameter of the bulb 67. The suction cup 5 and the track 4 cannot move sideways relative to the guide 6' as the bulb 67 cannot be displaced from the groove 57 in a direction perpendicular to the longitudinal direction of the rail 31. The suction cup 5 and track 4 cannot be lifted up from the rail 31 either. The through channel 32 of the suction cup 5 is laterally offset relative to the centre of the suction cup 5. Correspondingly, the attachment block 5c is laterally offset relative to the centre line of the track 4, and the opening 8b is laterally offset relative to the centre line of the rail 31.

The design of the suction cups 5, 5', 5" enables the crawler 100 to move across an uneven surface or a surface that curves, even though the frame structure 1 of the crawler 100 is rigid. The rail 31 may also be rigid. This is advantageous when the frame structure 1 forms a platform for tools like brush tools 20 and for actuators 16.

In a variant of the invention, a further rail (not shown) is placed within an inside of the inner portion 29 of the track 4, see figure 2, and a suction device 50 is in fluid communication with the suction cups 5 on the outside of the inner portion 29 of the track 4, to produce negative pressure for the suction cups 5 in the same way as explained for the suction cups 5 on the outside of the outer portion 30 of the track. With that, a crawler 100 which, both on its bottom side and top side, has suction cups 5 that can adhere to a surface 28 is produced.

The track 4 is of the full-track type. By a full track is meant a track that forms an unbroken external surface and is without any through gaps transversely to the longitudinal direction of the track. A track of the link-track or chain-track type will not work together with the invention, as a link track will have gaps between two consecutive links. Fluid may flow through the gaps and thereby it is not possible to create a negative pressure in the suction cups 5, 5', 5" as described in the foregoing.

When the suction cups 5, 5', 5" are stuck fast to the surface 28, and the crawler 100 thereby is attached to the surface 28, the crawler 100 may be subjected to forces from waves, tools or other things, which may lead to the frame structure 1 of the crawler 100 moving towards and away from the surface 28. A movement of the crawler 100 away from the surface 28 might lift the track 4 clear of the rail 31, 31', 31", so that fluid may freely enter between the track 4 and the rail 31, 31', 31" in the sealing area 36 and there will no longer be negative pressure in the suction cups 5, 5', 5". Movement of the crawler 100 away from the surface 28 brings the guide ribs 61, 63 into abutment against the internal guide lips 33, which will stop the movement.

The guide 6 for the necks 5b, 5b', 5b" of the suction cups 5, 5', 5", which is shown with the guide ribs 61, 63 in the figures, is on the outside of the tracks 4, seen from the crawler 100. The tracks 4 are thereby guided stably in their longitudinal direction, and the tracks 4 are not subjected to torsion to any substantial degree when there is a lateral strain on the crawler 100. In what follows, it will be described how the direction of propulsion of the crawler 100 can be changed.

Figure 3 shows a turntable 11 in the middle area of the crawler 100. The turntable 11 is rotatably supported along its outer edge in brackets 12, so that it can be rotated in

the horizontal plane relative to the frame structure 1. The rotation is effected and controlled by a linear actuator 16 which may be electric, or it may be a hydraulic cylinder. The working length of the linear actuator 16 gives the possibility of only a limited rotation of the turntable 11. The rotation may alternatively be brought about by a motor (not shown) attached to the frame structure 1, rotating the turntable 11 via a chain, a track or via a gear on the motor in engagement with a toothed rim on the turntable 11 (not shown). In that case, the turntable 11 may be fully rotatable relative to the frame 1.

The turntable 11 includes four holders 15, each holding a respective actuator 13, see figure 1. Each actuator 13 is provided with a suction cup 14, with suction faces facing the bottom side of the crawler 100. The suction cups 14 are connected via vacuum hoses 39 to a suction device not shown, which may produce a negative pressure which can be switched on and off and possibly be adjustable via means not shown, such as electric actuators, valves and switches. The suction cups 14 are shown as being arranged peripherally near the outer edge of the turntable 11.

To understand how the direction of propulsion of the crawler 100 can be changed, it is useful to imagine a plane formed of the suction faces of the suction cups 5 on the bottom side of the crawler 100. This plane is termed the "attachment plane" in what follows. When the suction cups 5 are stuck fast to the surface 28, the attachment plane coincides with the surface 28. The actuators 13 can move the suction cups 14 from a positon above the attachment plane, towards and past the attachment plane and back. The suction cups 14 may be collectively or individually movable. The number of holders 15, actuators 13 and suction cups 14 may be different from the four shown.

Taking for a starting point that the crawler 100 is attached to a surface, exemplified, in what follows, by the surface 28, by means of the suction cups 5, the changing of the direction of propulsion of the crawler 100 comprises the following steps:

- moving at least two of the suction cups 14 of a turntable 11 up to the attachment plane, into position against the surface 28;
- producing negative pressure between the suction cups 14 of the turntable 11 and the surface 28, so that the suction cups 14 of the turntable 11 adhere to the surface 28;
- removing negative pressure between the suction cups 5 of the track 4 and the surface 28, so that the suction cups 5 of the track 4 disengage from the surface 28;
- further moving the suction cups 14 of the turntable 11 past the attachment plane so that the suction cups 5 of the track 4 and the frame structure 1 of the crawl-

er 100 are lifted from the surface 28;

- rotating the turntable 11 relative to the frame structure 1, so that the frame structure 1 is rotated relative to the surface 28;

- retracting the suction cups 14 of the turntable 11 to the attachment plane, so that the suction cups 5 of the track 4 are positioned against the surface 28;

- producing negative pressure between the suction cups 5 of the track 4 and the surface 28, so that the suction cups 5 of the track 4 adhere to the surface 28;

- removing negative pressure between the suction cups 14 of the turntable 11 and the surface 28, so that the suction cups 14 of the turntable 11 disengage from the surface 28; and

- further retracting the suction cups 14 of the turntable 11 from the attachment plane, so that the suction cups 14 of the turntable 11 are moved away from the surface 28.

The frame structure 1, which constitutes a main part of the crawler 100, has thereby been rotated and been given a new longitudinal direction, which is also the new direction of propulsion of the crawler 100. If necessary, the above steps are repeated until the crawler 100 has been given the desired direction of propulsion.

Figure 10 shows the crawler 100 from below and shows an opening lib in the turntable 11. The opening lib has attachment possibilities, for example brackets with holes for bolts (not shown), for tools for carrying out work when the crawler 100 is fixed to the surface 28. The opening lib may also be used as a cargo space.

Figure 11 is a front view of the crawler 100 with a plug tool mounted on it on the turntable 11. The plug tool is for installing and removing a plug 27 in a hull passage 28b. The plug tool includes two or more linear actuators 25 mounted on the turntable 11. The linear actuators 25 have piston rods that are attached to a plug holder 25c, which includes a locking device 25b for the plug 27. The locking device 25b may be a hydraulic actuator. The plug tool also includes a linear actuator 26 with a piston rod with a hydraulic male coupling 26 for engagement with a corresponding hydraulic female coupling 27b of the plug 27, for the application of hydraulic pressure. The linear actuators 25, 26 may be electric, or they may be hydraulic cylinders.

The plug 27 is locked to the plug holder 25c, and the hydraulic male coupling 26b is inserted into the hydraulic female coupling 27b before the crawler 100 is being launched. The crawler 100 is then, as explained earlier, positioned at and stuck to the surface 28 with the suction cups 5, with the plug 27 over the hull passage 28b. Then the linear actuators 25 and 26 are extended, so that the plug 27 is moved towards the

surface 28 and into the hull passage 28b. Then hydraulic pressure is applied to the plug 27 through the hydraulic couplings 26b, 27b, which, in a manner known *per* se, brings a seal in the plug 27 to expand against a sealing surface in the hull passage 28b, so that the plug 27 is locked. Then the actuator 26 is retracted, so that the male coupling 26b is pulled out of the female coupling 27b. The locking device 25b is disengaged, so that the plug 27 is released from the plug holder 25c. Then the linear actuators 25 are retracted, so that the plug holder 25c is removed from the plug 27. The plug 27 is now installed in the hull passage 28b, and the crawler 100 may be detached from the surface 28 and removed. The above may be repeated in the reverse order when the plug 27 is to be removed from the hull passage 28b. The plug tool may alternatively be equipped with a motor or actuator (not shown) instead of the linear actuator 26 with the hydraulic male coupling 26b to operate a mechanically operable plug.

In the drawings, the suction cups 5 are shown as circular suction cups 5. The suction cups 5 may also have other geometries such as square or rectangular, as is known in the art.

It should be noted that all the above-mentioned embodiments illustrate the invention but do not restrict it, and persons skilled in the art may construct many alternative embodiments without departing from the scope of the dependent claims. In the claims, reference numbers in brackets are not to be considered restrictive. The use of the verb "to comprise" and its different forms does not exclude the presence of elements or steps that are not mentioned in the claims. The indefinite article "a" or "an" before an element does not exclude the presence of several such elements. The fact that some features are specified in mutually different dependent claims does not indicate that a combination of these features cannot be used with advantage.

C l a i m s

1. A crawler (100) configured for submarine use, with a bottom side for positioning against a surface (28), including:
- at least two wheels (2) and a driving device (19) for driving at least one of the two wheels (2);
- a track (4) extending around and between the wheels (2), the track (4) between the wheels (2) extending in an inner portion (29) and an outer portion (30), wherein an outside of the outer portion (30) of the track (4) forms the bottom side of the crawler (100);
- a rail (31, 31', 31") positioned within an inside of the outer portion (30) of the track (4);
- suction cups (5, 5', 5") on the outside of the track (4) for positioning against the surface (28); and
- a suction device (50) in fluid communication with the suction cups (5, 5', 5"), so that a negative pressure is produced in the suction cups (5, 5', 5") when the suction cups (5, 5', 5") on the outside of the outer portion (30) of the track (4) are placed against the surface (28), and the crawler (100) is thereby held fixed against the surface (28),
c h a r a c t e r i z e d i n that
- each suction cup (5) is provided with a neck (5b, 5b', 5b");
- the neck (5b, 5b', 5b") is attached to the track (4);
- the neck (5b, 5b', 5b") includes at least one gap 54;
- an internal channel (32, 32', 32") extends through the neck (5b, 5b', 5b") and the track (4);
- a guide (6, 6') fixed in the crawler (100) includes at least one guide rib (61, 63; 65) positioned in the gap (54) when the suction cups (5, 5', 5") are on the outside of the outer portion (30) of the track (4); and
- a fluid connection is formed from a vacuum pipe (10, 10', 10"), a vacuum chamber (8, 8', 8"; 38) and the internal channel (32, 32', 32") between the suction device (50) and the suction cup (5, 5', 5").

2. The crawler (100) according to claim 1, wherein the guide (6) consists of two longitudinal guide ribs (61, 63) on opposite sides of the necks (5b, 5b', 5b") of the suction cups (5, 5', 5").

3. The crawler (100) according to claim 1 or 2, wherein the guide (6, 6') is attached to the rail (31, 31', 31").

4. The crawler (100) according to claim 1, wherein the neck (5b, 5b', 5b") of the suction cup (5, 5', 5") is provided with a circular groove (57); and a guide rib (65) is provided with a longitudinal bulb (67) in its longitudinal direction, the bulb (67) being positioned in the groove (57) when the suction cup (5, 5', 5") is on the outside of the outer portion (30) of the track (4).

5. The crawler (100) according to claim 1, wherein the suction cup (5, 5', 5") is attached to the track (4) with a pipe (52) to an attachment block (5c) on the inside of the track (4).

6. The crawler (100) according to claim 1, wherein the suction cup (5, 5', 5") is attached to the track (4) with a through connection (35) to an attachment block (5c) on the inside of the track (4).

7. The crawler (100) according to one of the preceding claims, wherein the track (4) lies, in the main, tight and slidingly against the rail (31, 31', 31") in a sealing area (36).

8. The crawler (100) according to one of the preceding claims, wherein the rail (31, 31') has at least one vacuum chamber (8, 8', 8") in fluid communication with the suction device (50) via the vacuum pipe (10, 10', 10"), and the vacuum chamber (8, 8', 8") is in fluid communication with the internal channel (32, 32', 32") through a longitudinal opening (8b, 8b', 8b").

9. The crawler (100) according to claim 8, wherein the rail (31') has two vacuum chambers (8', 8") in fluid communication with respective suction devices (50), each with a vacuum pipe (10), the two vacuum chambers (8', 8") being in fluid communication with different internal channels (32', 32").

10. The crawler (100) according to claim 1, wherein the rail (31") has a recessed longitudinal middle portion (37) which is open towards the track (4), and the recessed middle portion (37) is in fluid communication with the suction device (50) via the vacuum pipe (10), so that a vacuum chamber (38) is formed between the rail (31") and the track (4), and the vacuum chamber (38) is in fluid communication with the internal channel (32).

11. The crawler (100) according to any one of the preceding claims, wherein the vacuum chamber (8, 8', 8"; 38) is elongated.

AMENDED CLAIMS
received by the International Bureau on 13 January 2016 (13.01.2016)

Amended claims

1. A crawler (100) configured for submarine use, with a bottom side for positioning against a surface (28), including:
- at least two wheels (2) and a driving device (19) for driving at least one of the two wheels (2);
- a track (4) extending around and between the wheels (2), the track (4) between the wheels (2) extending in a first portion (30) facing the bottom side of the crawler (100), and a second portion (29) opposite of the first portion, wherein an outside of the first portion (30) of the track (4) forms the bottom side of the crawler (100);
- a rail (31, 31', 31") positioned within an inside of the first portion (30) of the track (4);
- suction cups (5, 5', 5") on the outside of the track (4) for positioning against the surface (28); and
- a suction device (50) in fluid communication with the suction cups (5, 5', 5"), so that a negative pressure is produced in the suction cups (5, 5', 5") when the suction cups (5, 5', 5") on the outside of the first portion (30) of the track (4) are placed against the surface (28), and the crawler (100) is thereby held fixed against the surface (28),
characterized in that
- each suction cup (5) is provided with a neck (5b, 5b', 5b");
- the neck (5b, 5b', 5b") is attached to the track (4);
- the neck (5b, 5b', 5b") includes at least one gap 54;
- an internal channel (32, 32', 32") extends through the neck (5b, 5b', 5b") and the track (4);
- a guide (6, 6') fixed in the crawler (100) includes at least one guide rib (61, 63; 65) positioned in the gap (54) when the suction cups (5, 5', 5") are on the outside of the first portion (30) of the track (4); and
- a fluid connection is formed from a vacuum pipe (10, 10', 10"), a vacuum chamber (8, 8', 8"; 38) and the internal channel (32, 32', 32") between the suction device (50) and the suction cup (5, 5', 5").

2. The crawler (100) according to claim 1, wherein the guide (6) consists of two longitudinal guide ribs (61, 63) on opposite sides of the necks (5b, 5b', 5b") of the suction cups (5, 5', 5").

3. The crawler (100) according to claim 1 or 2, wherein the guide (6, 6') is attached to the rail (31, 31', 31").

4. The crawler (100) according to claim 1, wherein the neck (5b, 5b', 5b") of the suction cup (5, 5', 5") is provided with a circular groove (57); and a guide rib (65) is provided with a longitudinal bulb (67) in its longitudinal direction, the bulb (67) being positioned in the groove (57) when the suction cup (5, 5', 5") is on the outside of the first portion (30) of the track (4).

5. The crawler (100) according to claim 1, wherein the suction cup (5, 5', 5") is attached to the track (4) with a pipe (52) to an attachment block (5c) on the inside of the track (4).

6. The crawler (100) according to claim 1, wherein the suction cup (5, 5', 5") is attached to the track (4) with a through connection (35) to an attachment block (5c) on the inside of the track (4).

7. The crawler (100) according to one of the preceding claims, wherein an inside of the track (4) is, in the main, tight and slidingly positioned against the rail (31, 31', 31") in a sealing area (36).

8. The crawler (100) according to one of the preceding claims, wherein the rail (31, 31') has at least one vacuum chamber (8, 8', 8") in fluid communication with the suction device (50) via the vacuum pipe (10, 10', 10"), and the vacuum chamber (8, 8', 8") is in fluid communication with the internal channel (32, 32', 32") through a longitudinal opening (8b, 8b', 8b").

9. The crawler (100) according to claim 8, wherein the rail (31') has two vacuum chambers (8', 8") in fluid communication with respective suction devices (50), each with a vacuum pipe (10), the two vacuum chambers (8', 8") being in fluid communication with different internal channels (32', 32").

10. The crawler (100) according to claim 1, wherein the rail (31") has a recessed longitudinal middle portion (37) which is open towards the track (4), and the recessed middle portion (37) is in fluid communication with the suction device (50) via the vacuum pipe (10), so that a vacuum chamber (38) is formed between the rail (31") and the track (4), and the vacuum chamber (38) is in fluid communication with the internal channel (32).

11. The crawler (100) according to any one of the preceding claims, wherein the vacuum chamber (8, 8', 8"; 38) is elongated.

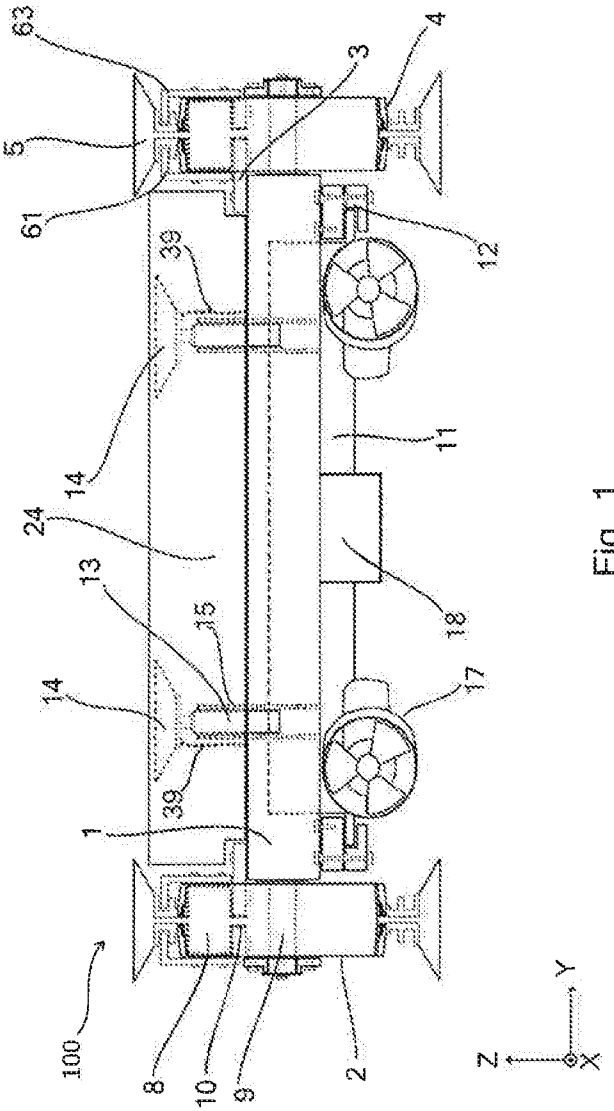

Fig. 1

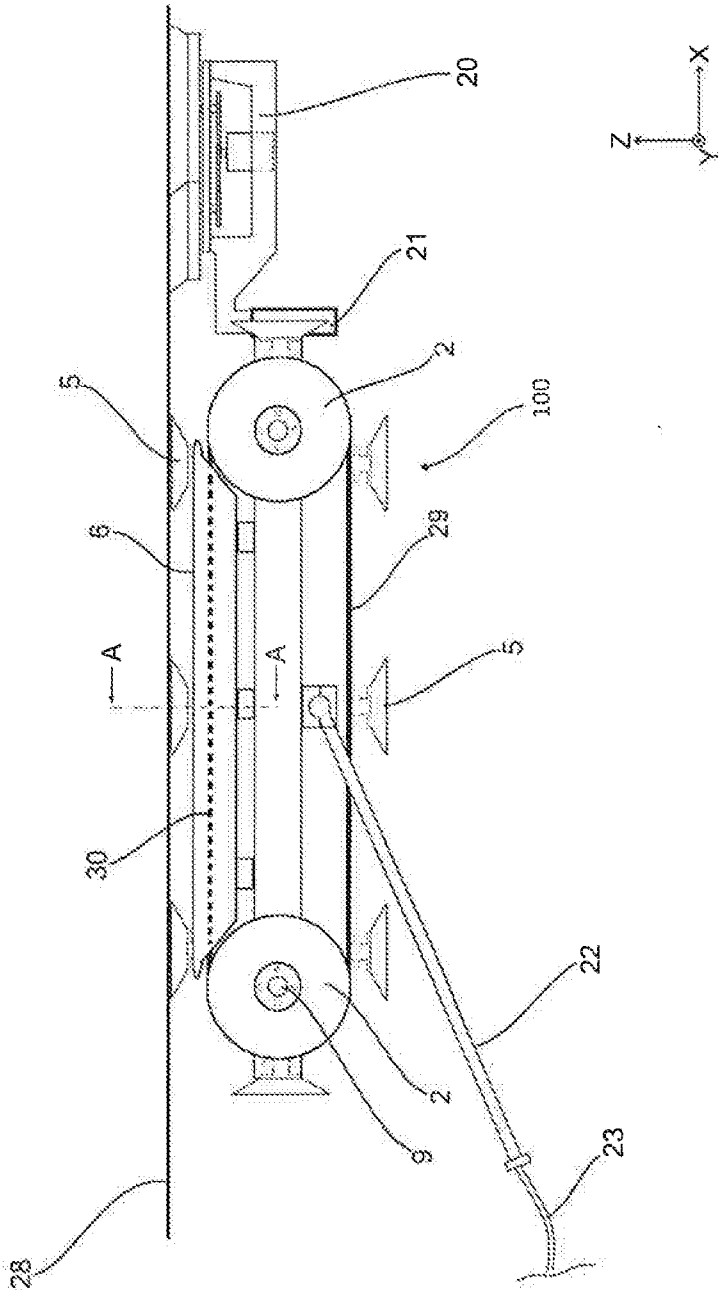

Fig. 2

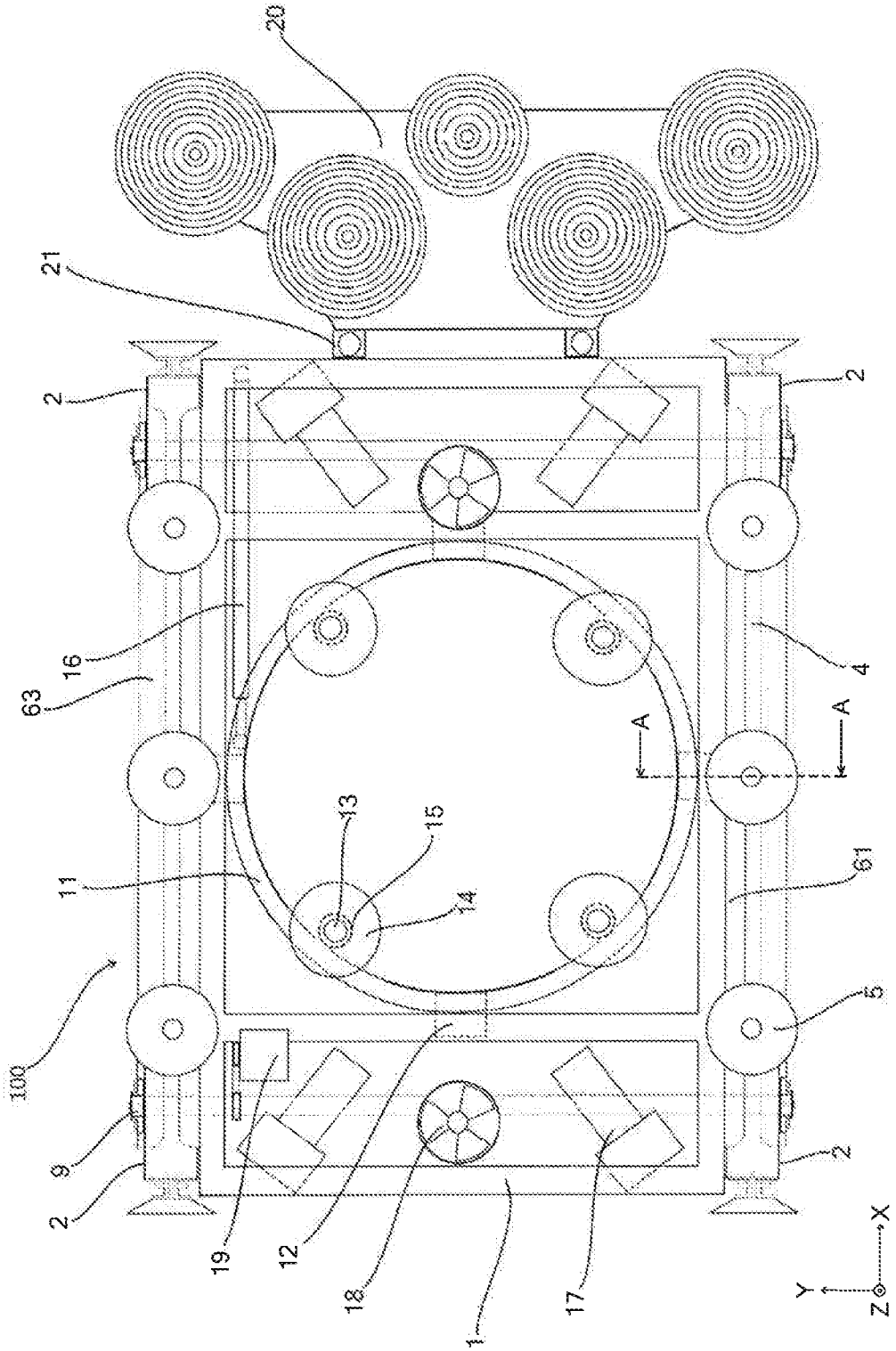

Fig. 3

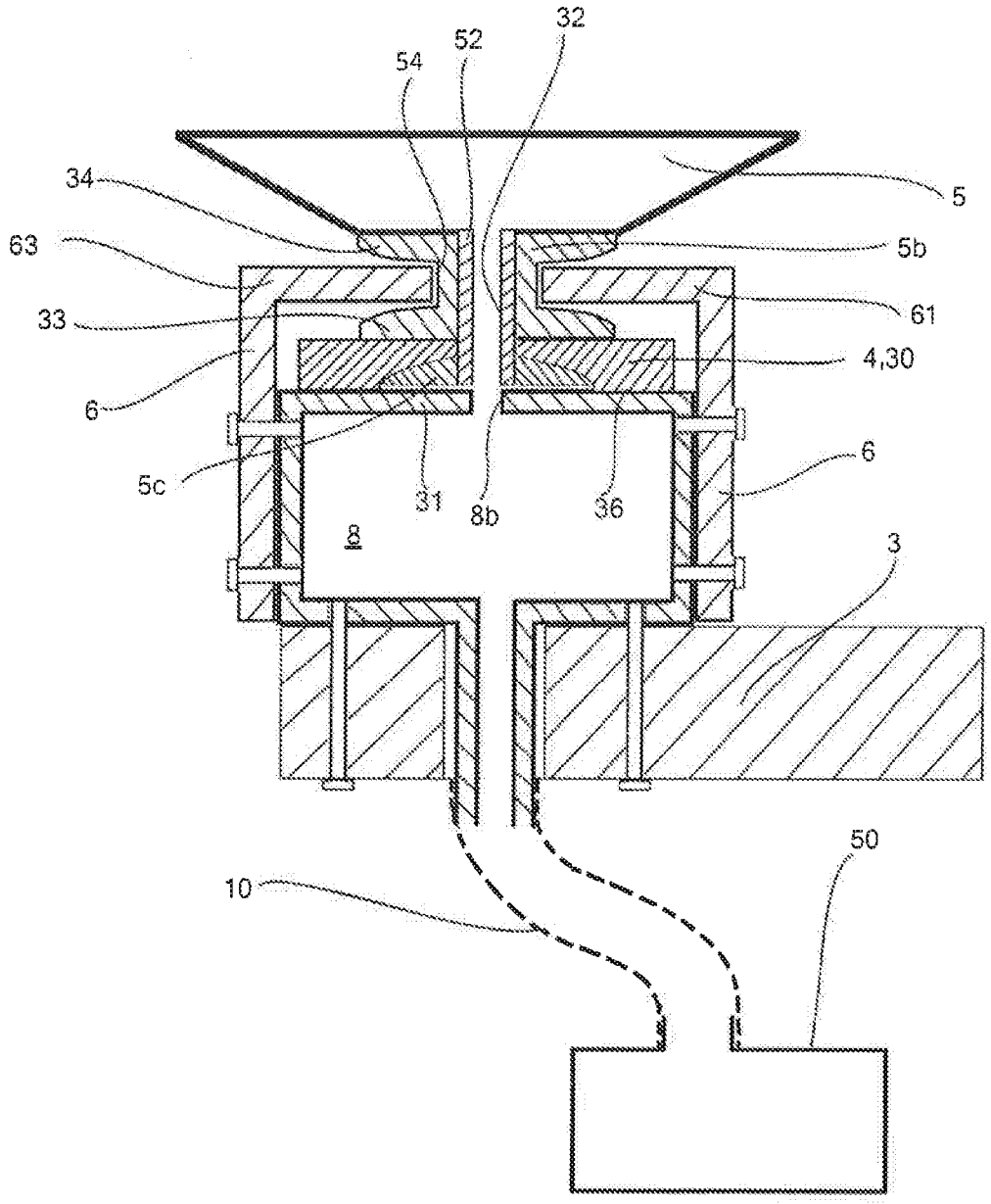

A - A

Fig. 4

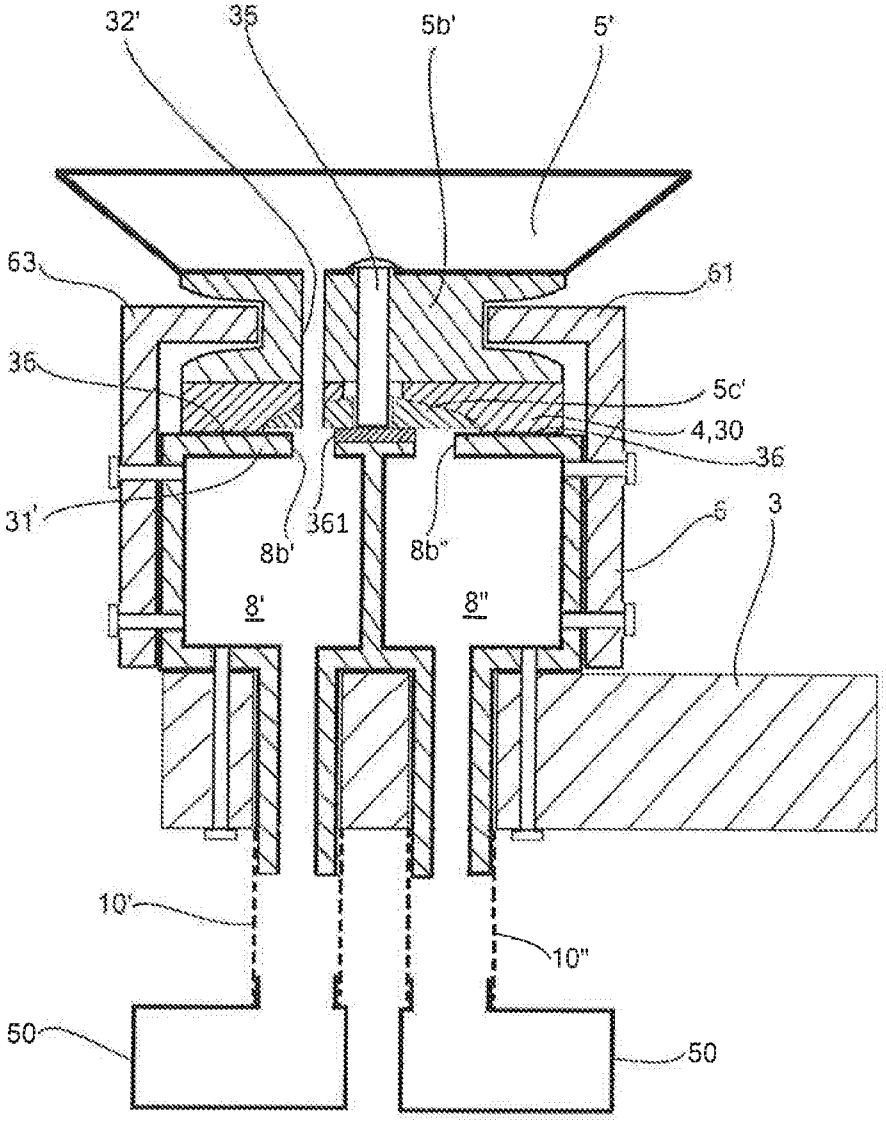

A - A

Fig. 5

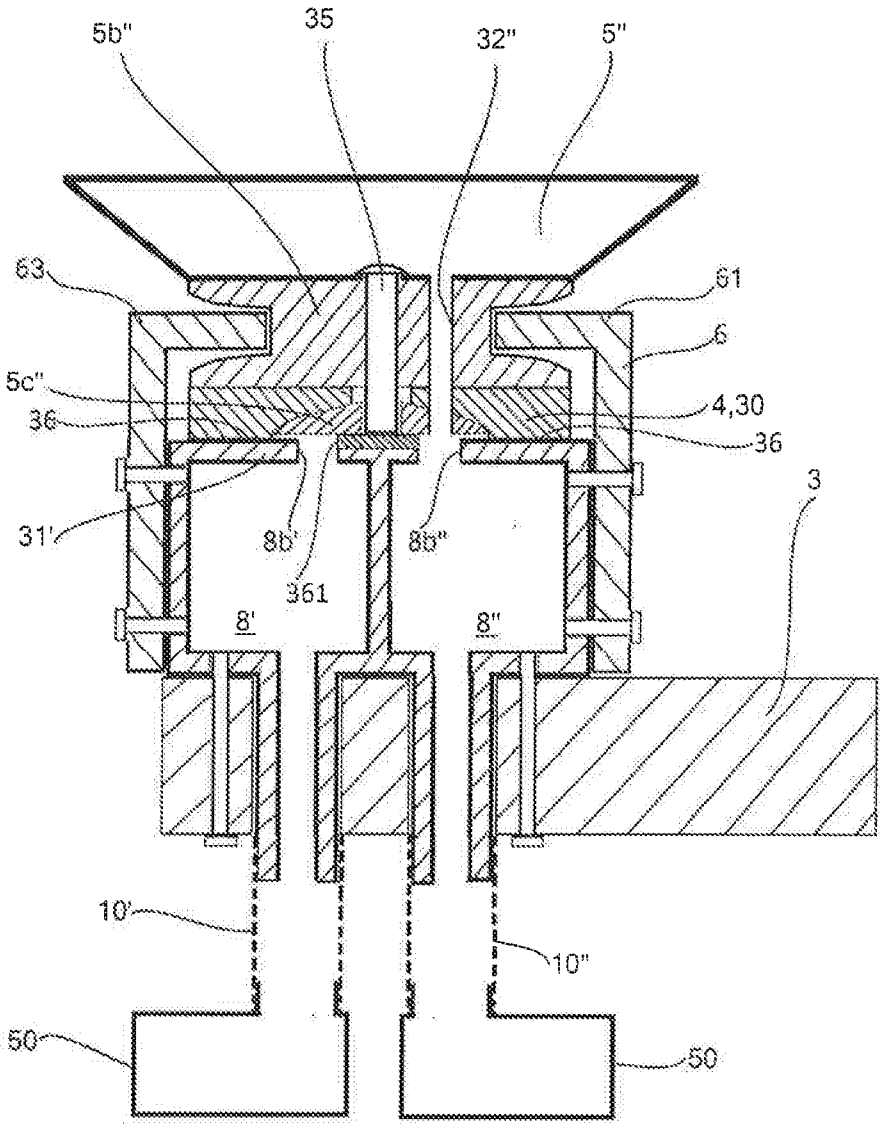

A - A

Fig. 6

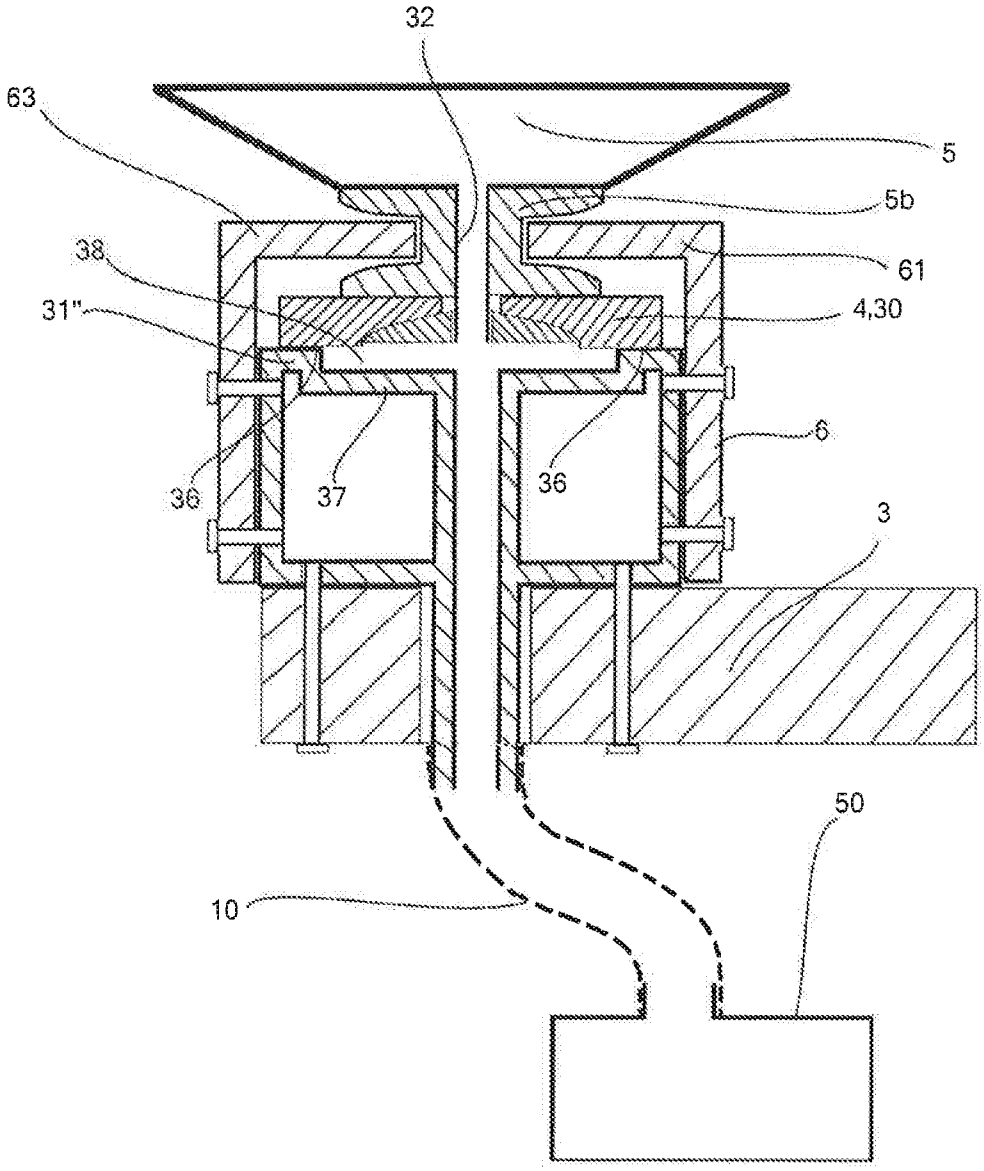

A - A

Fig. 7

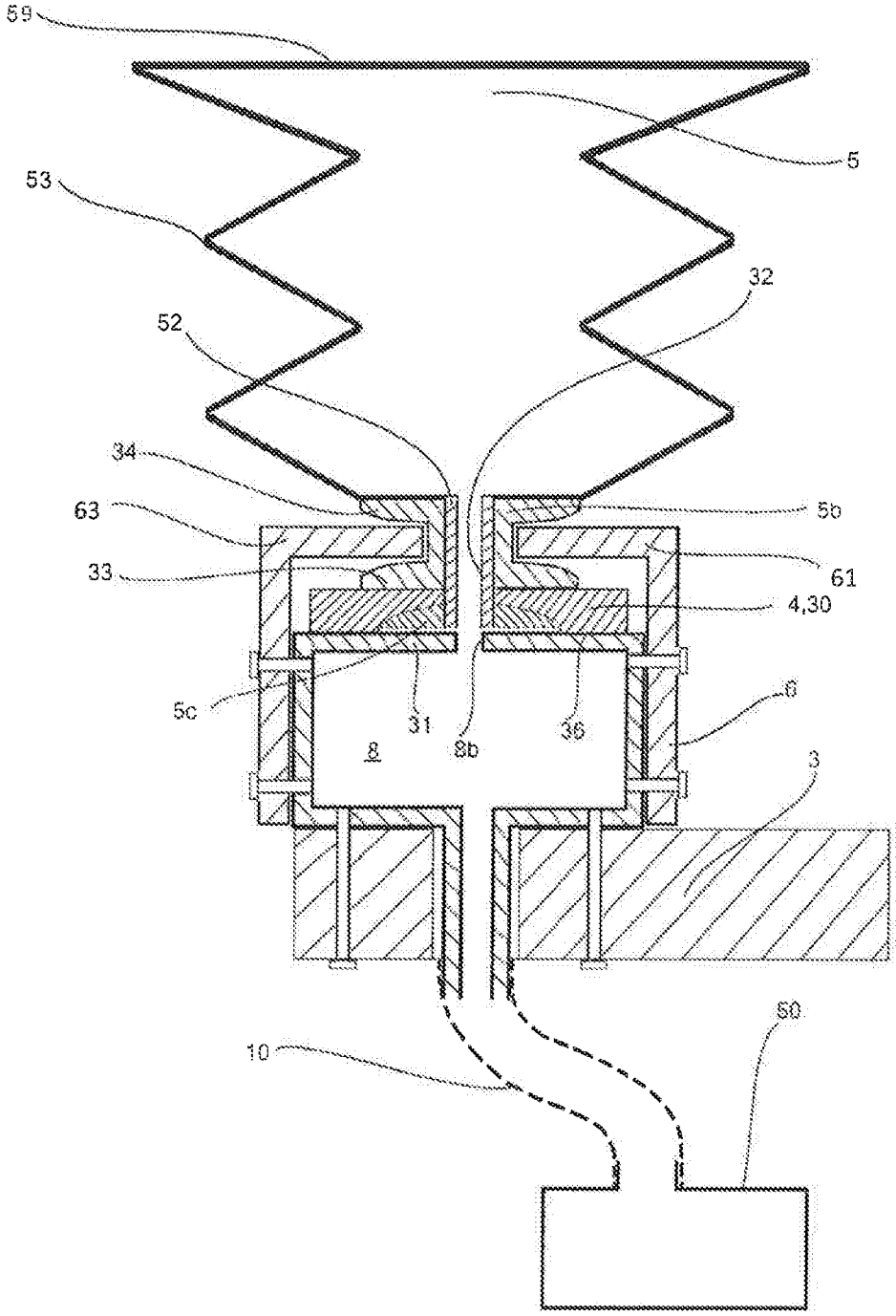

A - A

Fig. 8

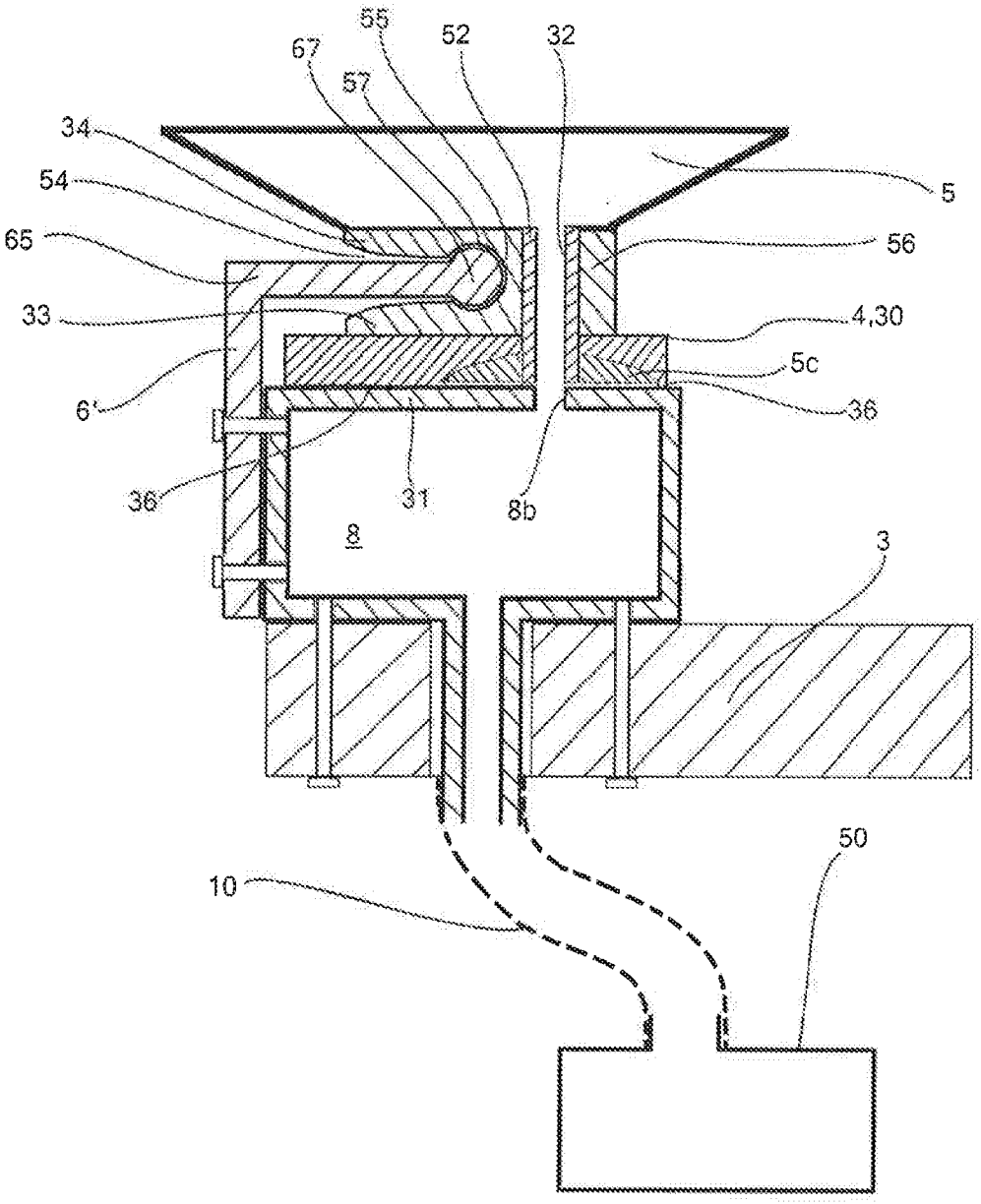

A - A

Fig. 9

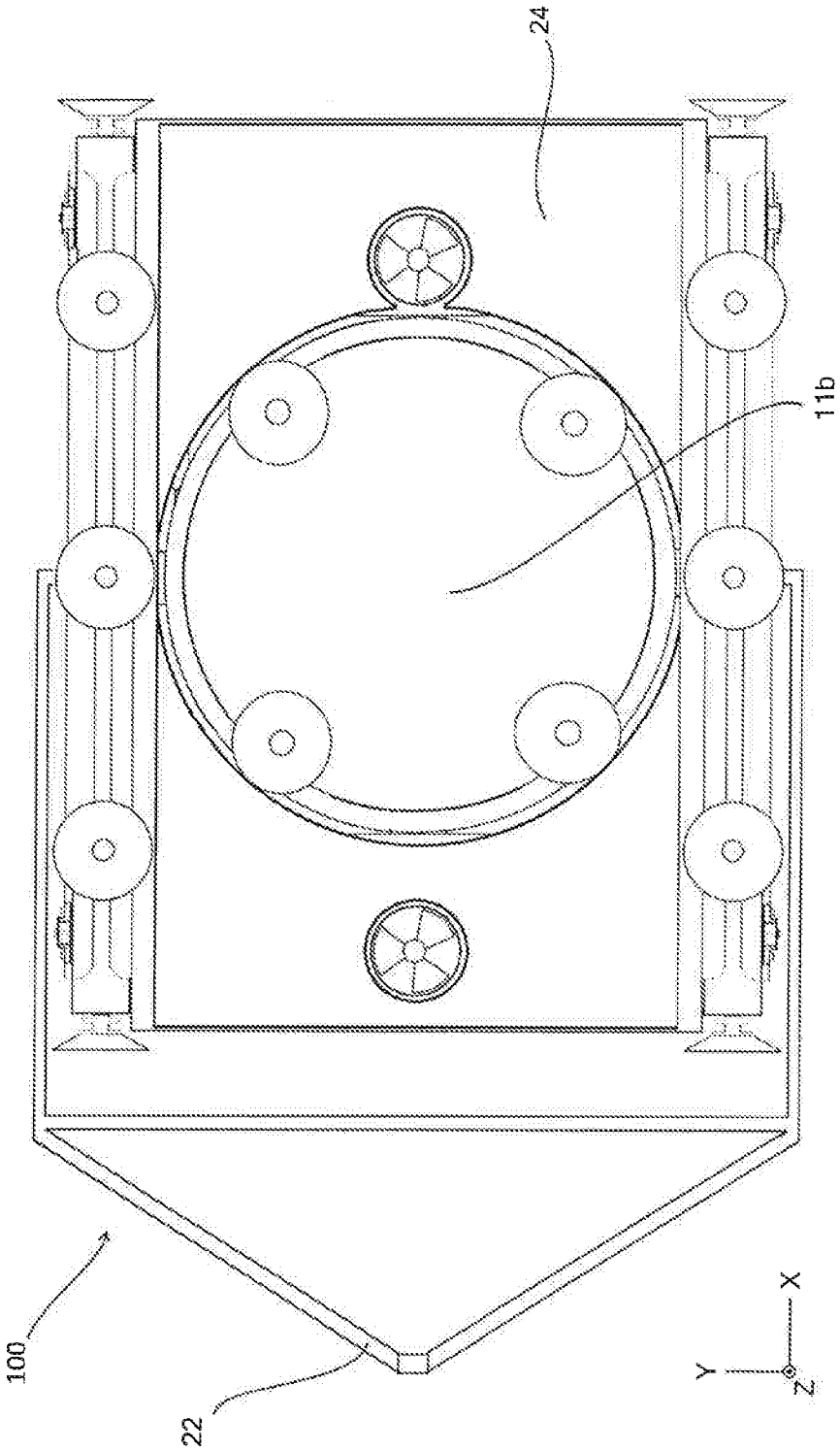

Fig. 10

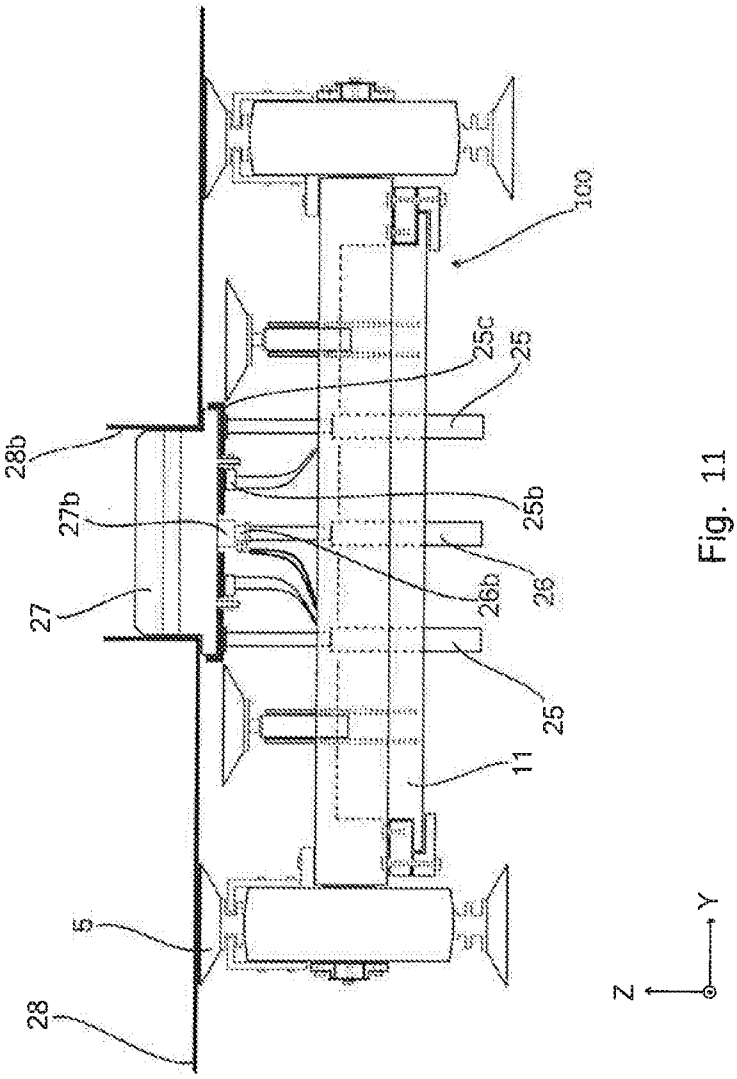

Fig. 11

INTERNATIONAL SEARCH REPORT

International application No.

PCT/NO2015/050149

A. CLASSIFICATION OF SUBJECT MATTER

B63B 59/10 (2006.01), B63G 8/00 (2006.01)

According to International Patent Classification (IPC) or to both national classification and IPC

B. FIELDS SEARCHED

Minimum documentation searched (classification system followed by ciassification symbols)

IPC: B63B, B63C, B63G, B62D

Documentation searched other than minimum documentation to the extent that such documents are included in the fields searched

DK, NO, SE, FI: Classes as above.

Electronic data base consulted during the international search (name of data base and, where practicable, search terms used)

EPODOC, WPI, FULLTEXT: ENGLISH

C. DOCUMENTS CONSIDERED TO BE RELEVANT

Category*	Citation of document, with indication, where appropriate, of the relevant passages	Relevant to claim No.
A	US 4664212 A (NAGATSUKA, K. et al) 1987.05.12 Column 1 line 6-16 and column 3 line 11-23; figures 1-4	1-11
A	DE 19727421 A1 (FRAUNHOFER GES FORSCHUNG) 1999.01.07 Column 6 line 64 to column 7 line 6, column 7 line 12-14 and 22-25; figures 1-3	1-11
A	WO 0075000 A1 (SHT CO LTD) 2000.12.14 Abstract; figures 1-3	1-11
A	KR 100774147 B1 (SEOUL NATIONAL UNIV. IND. FOUND.) 2007.11.07 Figures 1 and 5	1-11
P, A	WO 2015/081013 A1 (ELWHA LCC) 2015.06.04 Paragraphs [0032]-[0035]; figure 5	1-11

☐ Further documents are listed in the continuation of Box C. ☒ See patent family annex.

* Special categories of cited documents:

"A" document defining the general state of the art which is not considered to be of particular relevance

"E" earlier application or patent but published on or after the international filing date

"L" document which may throw doubts on priority claim(s) or which is cited to establish the publication date of another citation or other special reason (as specified)

"O" document referring to an oral disclosure, use, exhibition or other means

"P" document published prior to the international filing date but later than the priority date claimed

"T" later document published after the international filing date or priority date and not in conflict with the application but cited to understand the principle or theory underlying the invention

"X" document of particular relevance; the claimed invention cannot be considered novel or cannot be considered to involve an inventive step when the document is taken alone

"Y" document of particular relevance; the claimed invention cannot be considered to involve an inventive step when the document is combined with one or more oilier such documents, such combination being obvious to a person skilled in the art

"&" document member of the same patent family

Date of the actual completion of the international search	Date of mailing of the international search report
09/11/2015	13/11/2015
Name and mailing address of the ISA Nordic Patent Institute Helgeshoj Alle 81 DK - 2630 Taastrup, Denmark. Facsimile No. + 45 43 50 80 08	Authorized officer Daniel Westbye Telephone No. +4722387432

INTERNATIONAL SEARCH REPORT
Information on patent family members

International application No.
PCT/NO2015/050149

Patent document cited in search report / Publication date	Patent family member(s) / Publication date
US 4664212 A 1987.05.12	JPS 6146778 A 1986.03.07 GB 2164010 A 1986.03.12 DE 3540432 A1 1987.05.21
DE 19727421 A1 1999.01.07	NONE
WO 0075000 A1 2000.12.14	CA 2376051 A1 2000.12.14 AU 5111600 A 2000.12.28 KR 20010001624 A 2001.01.05 EP 1246750 A1 2002,10.09 AU762702B B2 2003.07.03 US 6971141 B1 2005.12.06
KR 100774147 B1 2007.11.07	NONE
WO 2015/081013 A1 2015.06.04	US 2015148955 A1 2015.05.28 US 2015148949 A1 2015.05.28